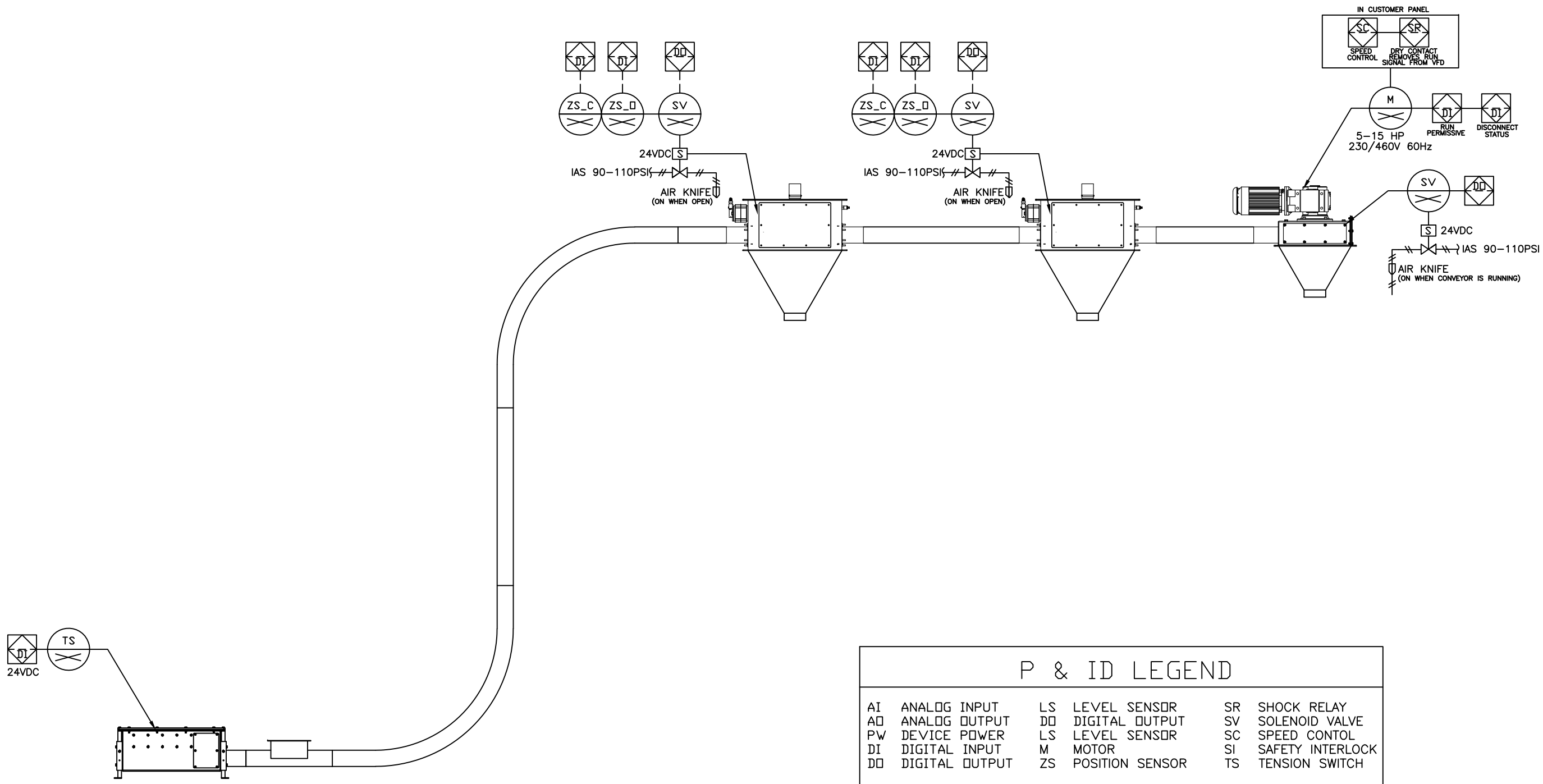

P & ID LEGEND

AI	ANALOG INPUT	LS	LEVEL SENSOR	SR	SHOCK RELAY
AO	ANALOG OUTPUT	DO	DIGITAL OUTPUT	SV	SOLENOID VALVE
PW	DEVICE POWER	LS	LEVEL SENSOR	SC	SPEED CONTOL
DI	DIGITAL INPUT	M	MOTOR	SI	SAFETY INTERLOCK
DO	DIGITAL OUTPUT	ZS	POSITION SENSOR	TS	TENSION SWITCH

CONFIDENTIAL.
THIS MATERIAL IS THE CONFIDENTIAL PROPERTY OF MODERN PROCESS EQUIPMENT INC. AND SHOULD NOT BE REPRODUCED, PUBLISHED, OR DISCLOSED WITHOUT EXPRESSED WRITTEN CONSENT. PRINT MUST BE RETURNED UPON REQUEST.
COPYRIGHT 2016 ©
MODERN
PROCESS EQUIPMENT INC.

REV.	CHANGE	DATE	BY

SYSTEM TITLE

CUSTOMER

CONFIDENTIAL
THIS MATERIAL IS THE CONFIDENTIAL PROPERTY OF MODERN PROCESS SYSTEMS INC., AND SHOULD NOT BE REPRODUCED PUBLISHED OR DISCLOSED WITHOUT EXPRESSED WRITTEN CONSENT
PRINT MUST BE RETURNED UPON REQUEST.

MODERN PROCESS EQUIPMENT, Inc.
SYSTEMS GROUP
325 South Bolte Avenue, Glenoe, Illinois 60025
PH (773)254-3029 FX (773)254-3035

DRAWING TITLE: SYSTEM P&ID

DRAWN	EW	SCALE
DATE	7-28-14	NTS
CHECKED		
DRAWING NO.	SAMPLE P&ID	